FUJITSU

SPLIT TYPE
ROOM AIR CONDITIONER
WALL MOUNTED TYPE

SERVICE MANUAL

Indoor unit	Outdoor unit
ASU9RLF1	AOU9RLFW1
ASU12RLF1	AOU12RLFW1

Refrigerant
R410A

CONTENTS

FUJITSU GENERAL LIMITED

SPECIFICATIONS

ELECTRICAL DATA

TYPE		Cool & heat inverter	
INDOOR UNIT		ASU9RLF1	ASU12RLF1
OUTDOOR UNIT		AOU9RLFW1	AOU12RLFW1
COOLING CAPACITY		9,000 Btu/h	12,000 Btu/h
HEATING CAPACITY		12,000 Btu/h	16,000 Btu/h
POWER SOURCE		208/230 V	208/230 V
FREQUENCY		60 Hz	60 Hz
RUNNING CURRENT	Cooling	3.2 A	4.4 A
	Heating	4.2 A	5.9 A
INPUT WATTS	Cooling	0.650 kW	0.960 kW
	Heating	0.890 kW	1.280 kW
E.E.R.	Cooling	13.80 Btu/Wh	12.50 Btu/Wh
COP	Heating	13.50 Btu/Wh	12.50 Btu/Wh
MOISTURE REMOVAL		2.75 Pts/h (1.3 L/h)	3.80 Pts/h (1.8 L/h)
AIR CIRCULATION		441 cfm (750 m^3/h)	441 cfm (750 m^3/h)
MAXIMUM CURRENT	Cooling	6.0 A	6.5 A
	Heating	7.5 A	9.0 A

FAN MOTOR

POWER SOURCE		230 V	230 V
INDOOR UNIT Cooling	High	1,320 r.p.m.	1,320 r.p.m.
	Medium	1,160 r.p.m.	1,160 r.p.m.
	Low	930 r.p.m.	930 r.p.m.
	Quiet	680 r.p.m.	680 r.p.m.
INDOOR UNIT Heating	High	1,320 r.p.m.	1,320 r.p.m.
	Medium	1,160 r.p.m.	1,160 r.p.m.
	Low	980 r.p.m.	980 r.p.m.
	Quiet	710 r.p.m.	710 r.p.m.
OUTDOOR UNIT Cooling		780 r.p.m.	780 r.p.m.
OUTDOOR UNIT Heating		720 r.p.m.	680 r.p.m.

NOISE LEVEL

INDOOR UNIT Cooling	High	43 dB	43 dB
	Medium	40 dB	40 dB
	Low	32 dB	32 dB
	Quiet	21 dB	21 dB
INDOOR UNIT Heating	High	43 dB	43 dB
	Medium	38 dB	38 dB
	Low	33 dB	33 dB
	Quiet	22 dB	22 dB
OUTDOOR UNIT Cooling		48 dB	49 dB
OUTDOOR UNIT Heating		48 dB	49 dB

COMPRESSOR AND REFRIGERANT

COMPRESSOR TYPE		Hermetic type, 4 pole, DC inverter motor, Rotary	
DISCRIMINATION		5SS072XAA	DA89X1C-20FZ2
WEIGHT (with oil)		13.0 lb (5.9 kg)	20.3 lb (9.2 kg)
PRECHARGED REFRIGERANT		30.0 oz (850 g)	37.0 oz (1,050 g)
REFRIGERANT TYPE		R410A	R410A
FULL CHARGE Pipe length	49 ft (15 m)	30.0 oz (850 g)	37.0 oz (1,050 g)
	66 ft (20 m)	33.5 oz (950 g)	40.6 oz (1,150 g)
ADDITIONAL CHARGE		0.21 oz/ft (20 g/m)	
MAXIMUM PIPING HEIGHT		49 ft (15 m)	

DIMENSIONS

INDOOR UNIT	H x W x D	10-9/16 x 33-1/16 x 8 inch (268 x 840 x 203 mm)	
OUTDOOR UNIT	H x W x D	21-1/4 x 25-31/32 x 11-13/32 inch (540 x 660 x 290 mm)	21-1/4 x 31-3/32 x 11-13/32 inch (540 x 790 x 290 mm)

WEIGHT

INDOOR UNIT	Net / Shipping	18.7 lb / 23.2 lb (8.5 kg / 10.5 kg)	
OUTDOOR UNIT	Net / Shipping	59.6 lb / 66.2 lb (27 kg / 30 kg)	79.5 lb / 86.1 lb (36 kg / 39 kg)

DIMENSIONS

INDOOR UNIT

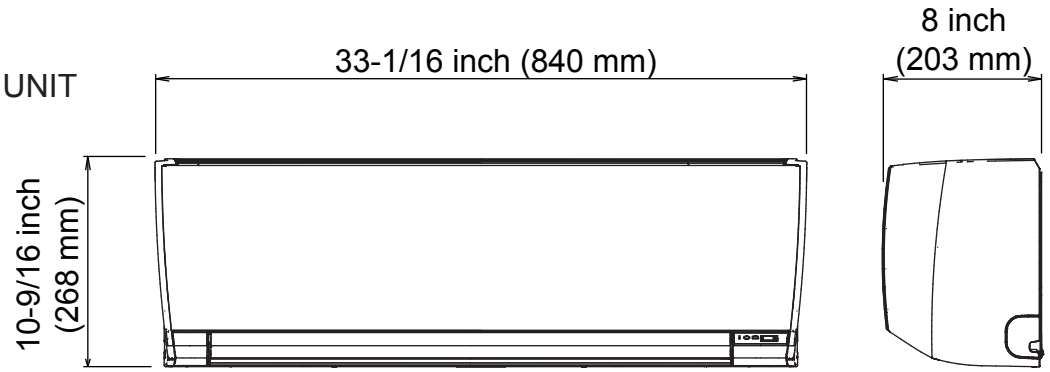

Drain hose

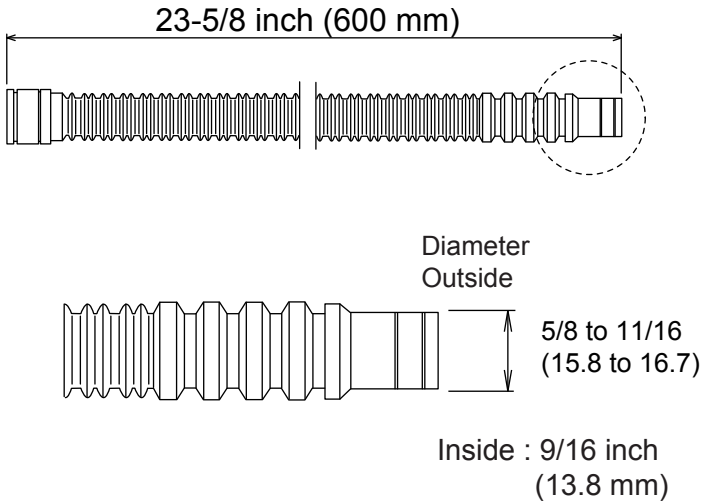

OUTDOOR UNIT
AOU9RLFW1

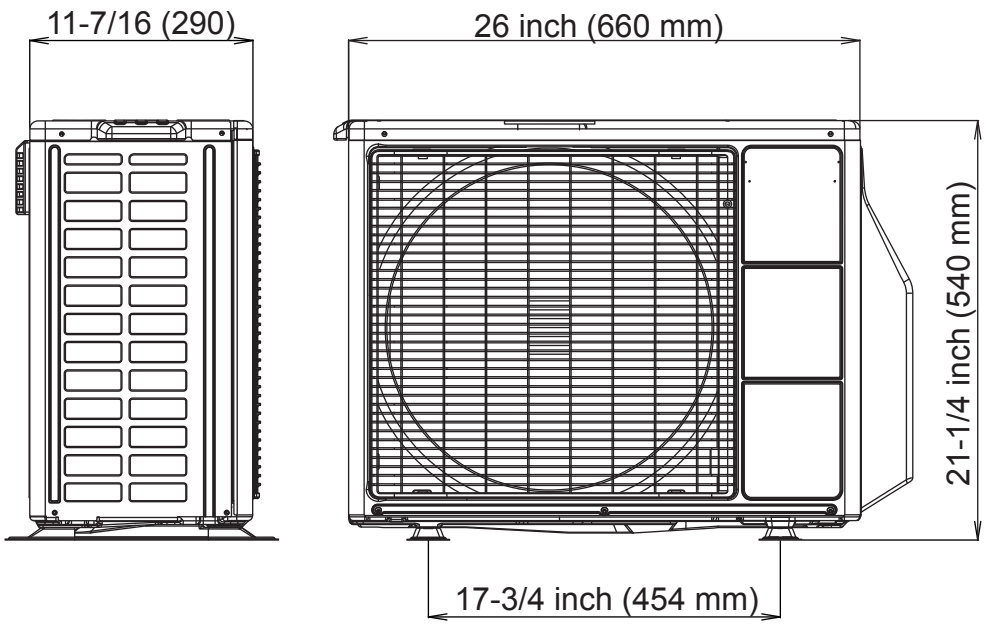

AOU12RLFW1

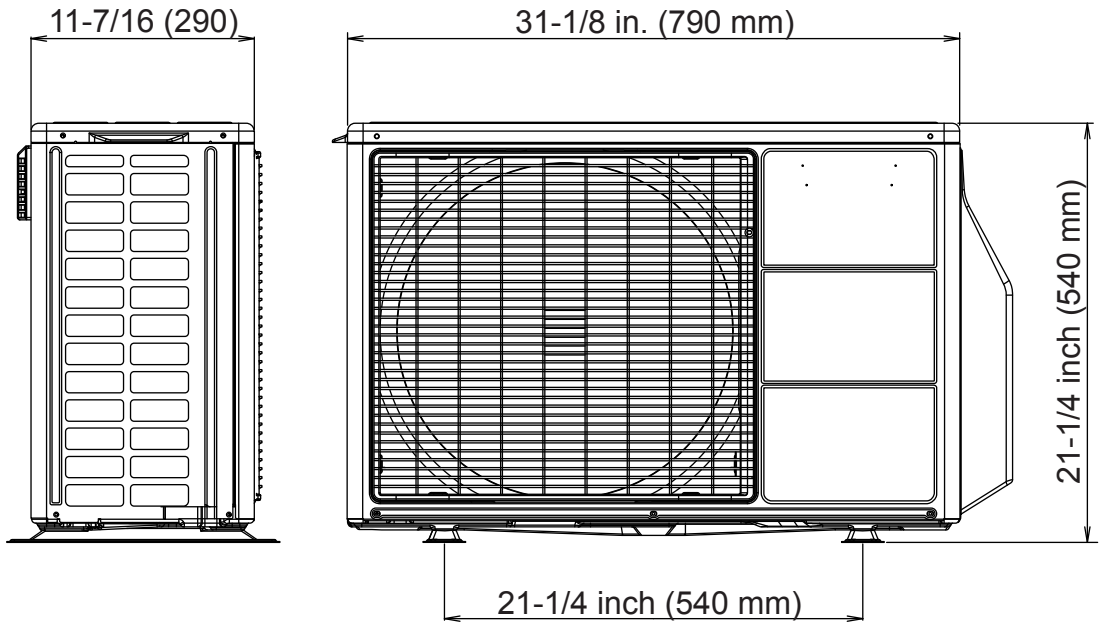

REFRIGERANT SYSTEM DIAGRAM

ASU9RLF1
AOU9RLFW1

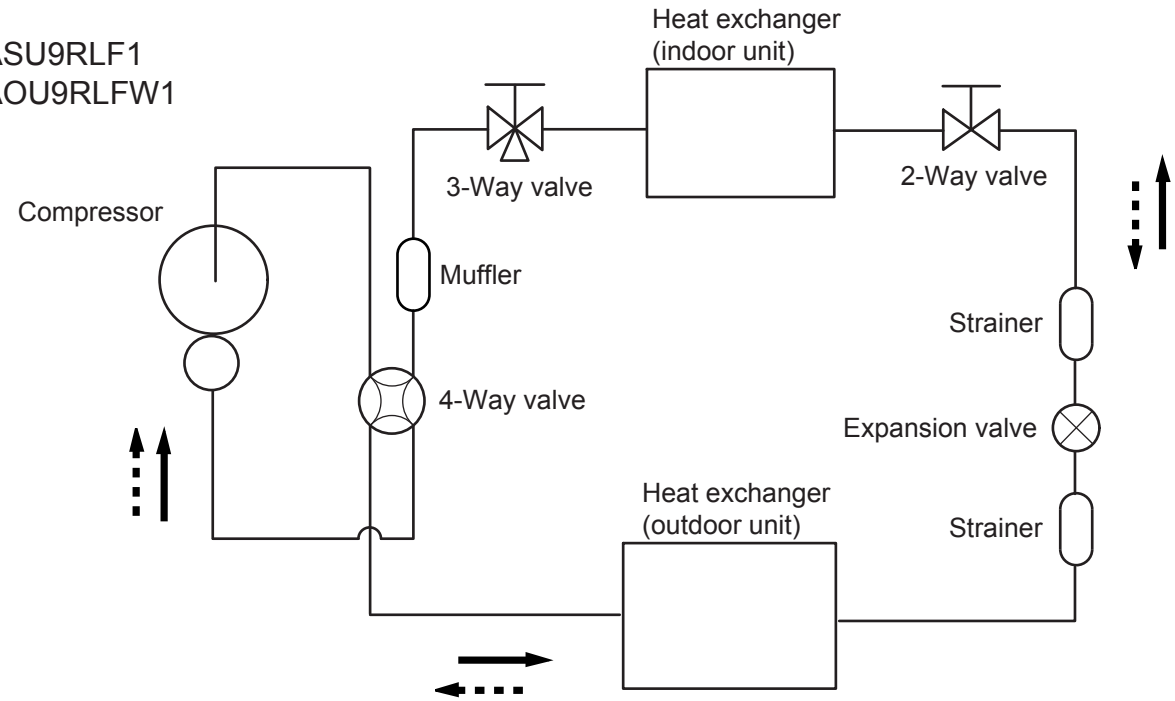

Refrigerant pipe diameter
Liquid : 1/4" (6.35 mm)
Gas : 3/8" (9.52 mm)

Refrigerant direction
Cooling
Heating

ASU12RLF1
AOU12RLFW1

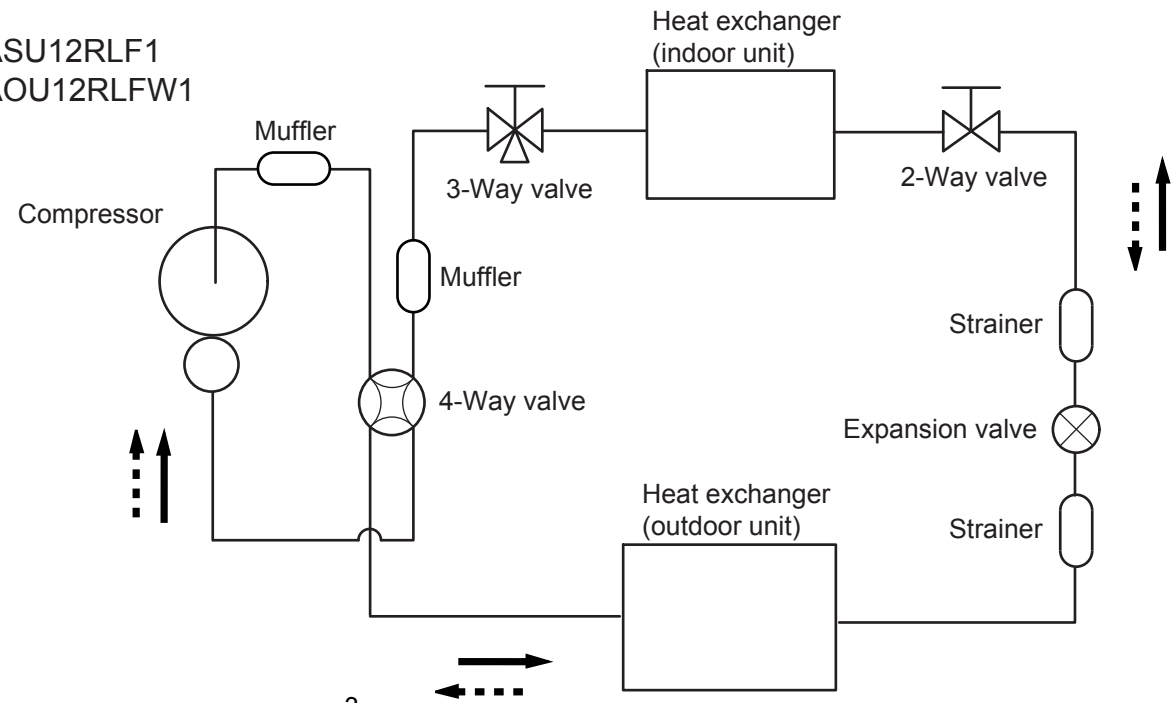

CIRCUIT DIAGRAM

ASU9RLF1 / AOU9RLFW1

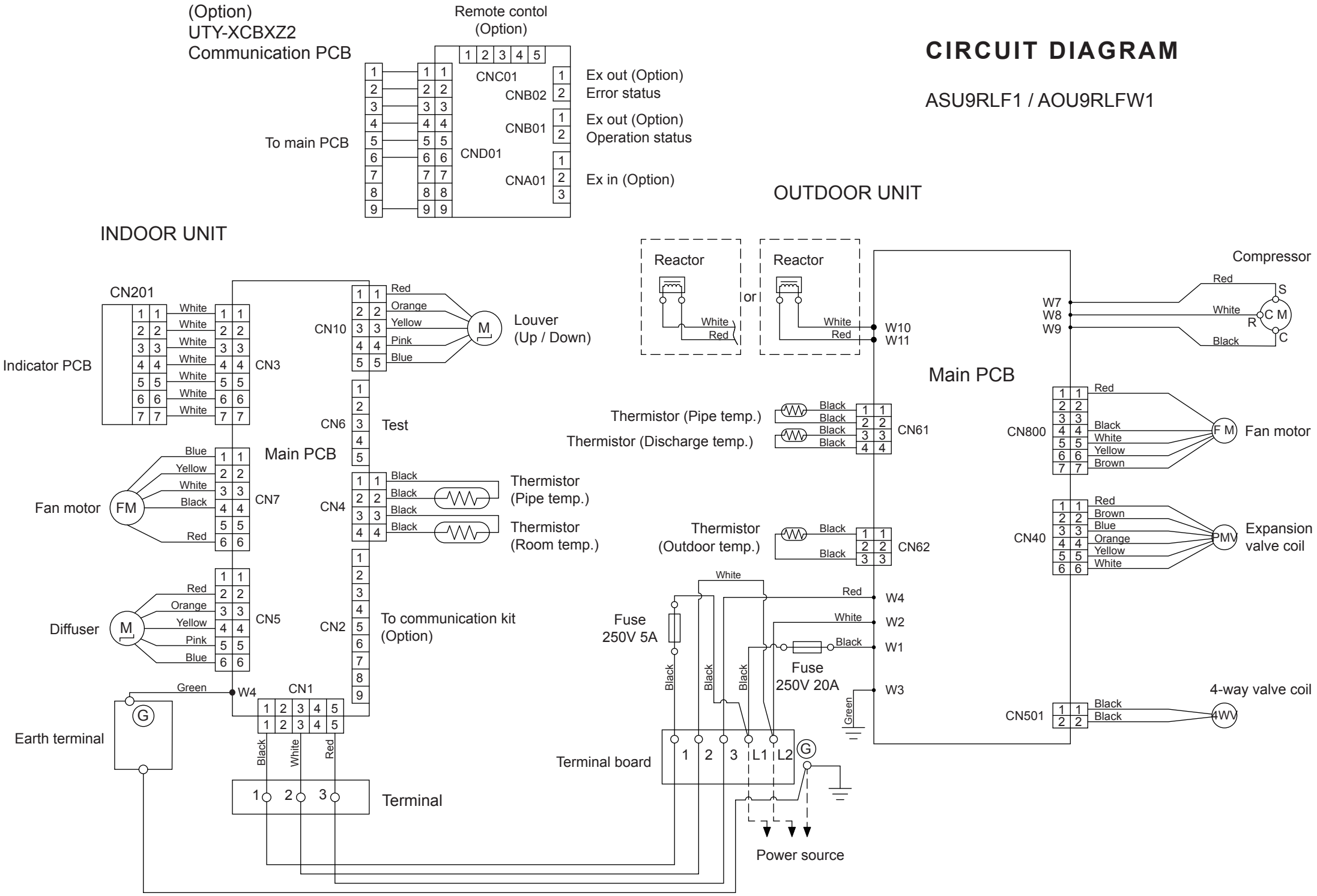

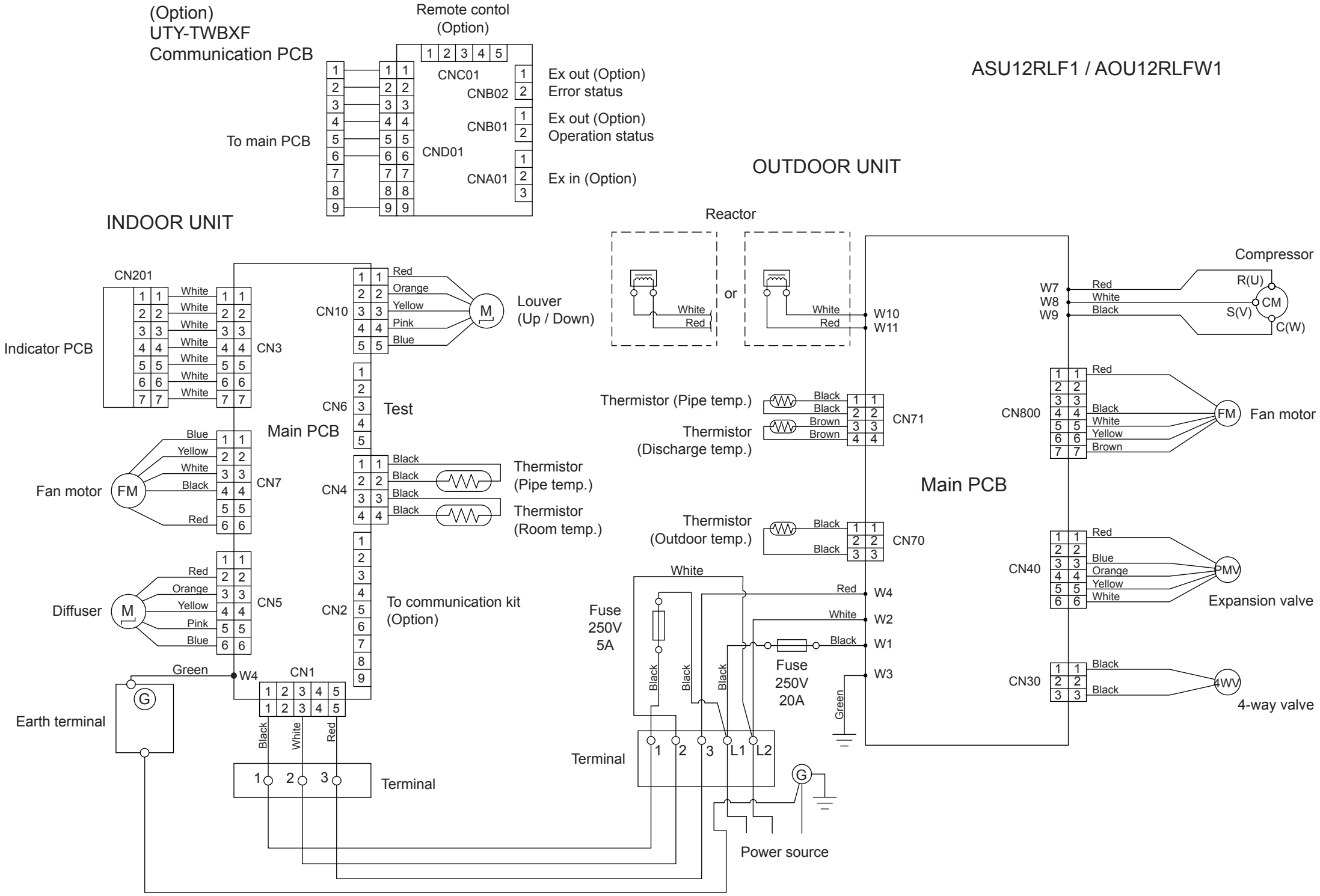
(Option)
UTY-TWBXF
Communication PCB
Remote contol
(Option)
CNC01
CNB02
CNB01
CND01
CNA01
Ex out (Option)
Error status
Ex out (Option)
Operation status
Ex in (Option)
To main PCB
ASU12RLF1 / AOU12RLFW1
OUTDOOR UNIT
INDOOR UNIT
Reactor
or
White
Red
Compressor
R(U)
S(V)
C(W)
CM
W7
W8
W9
W10
W11
CN201
Indicator PCB
CN3
CN10
Louver
(Up / Down)
CN6
Test
Main PCB
CN7
Fan motor
FM
CN4
Thermistor
(Pipe temp.)
Thermistor
(Room temp.)
CN5
Diffuser
CN2
To communication kit
(Option)
CN1
Green
W4
Earth terminal
Terminal
Thermistor (Pipe temp.)
Thermistor
(Discharge temp.)
CN71
Thermistor
(Outdoor temp.)
CN70
Main PCB
CN800
Fan motor
CN40
Expansion valve
PMV
CN30
4-way valve
4WV
Fuse
250V
5A
Fuse
250V
20A
W4
W2
W1
W3
Terminal
L1
L2
Power source

INDOOR PCB CIRCUIT DIAGRAM

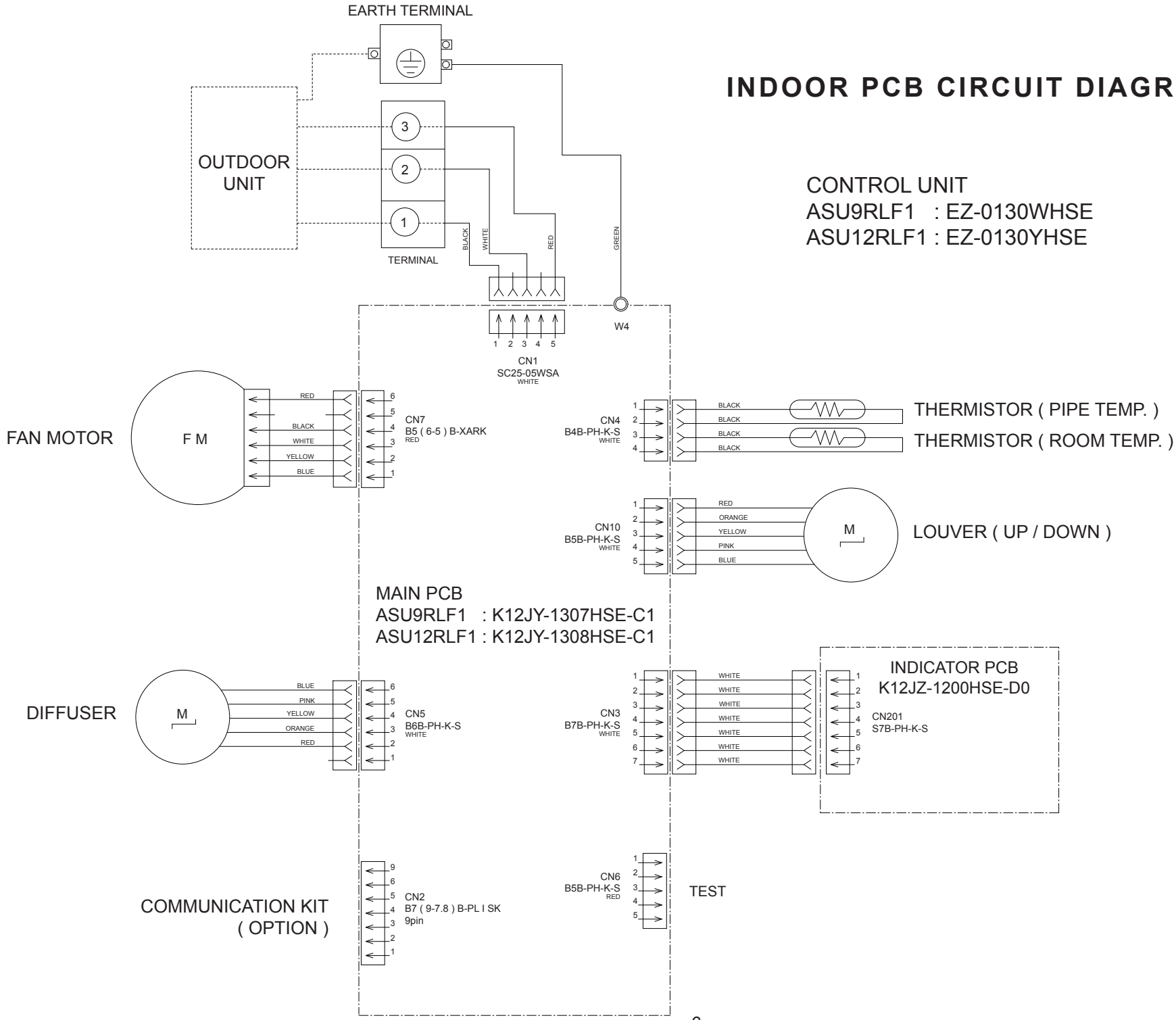

CONTROL UNIT
ASU9RLF1 : EZ-0130WHSE
ASU12RLF1 : EZ-0130YHSE

INDOOR UNIT
MAIN PCB
ASU9RLF1 : K12JY-1307HSE-C1
ASU12RLF1 : K12JY-1308HSE-C1

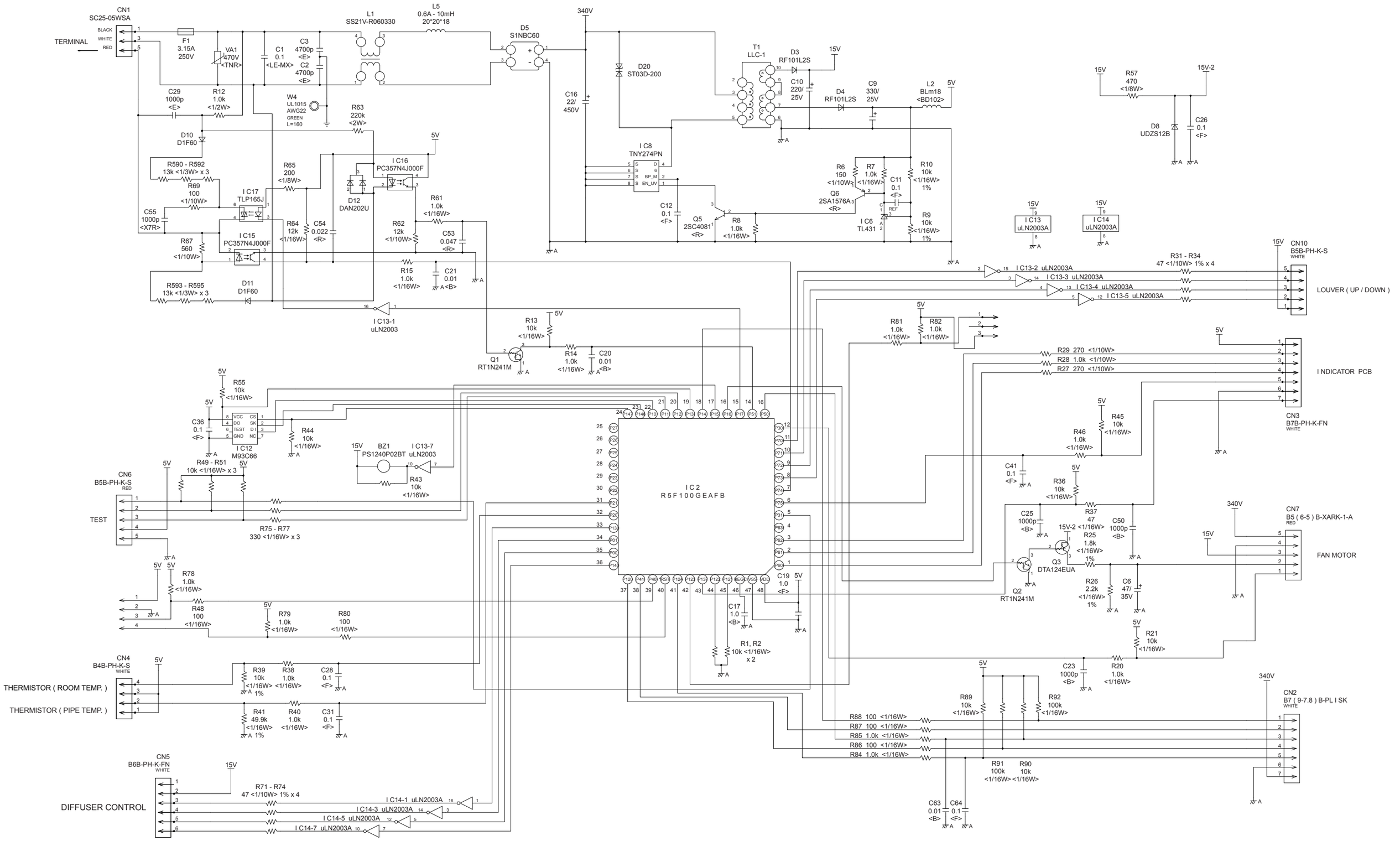

INDOOR UNIT
INDICATOR PCB
K12JZ-1200HSE-D0

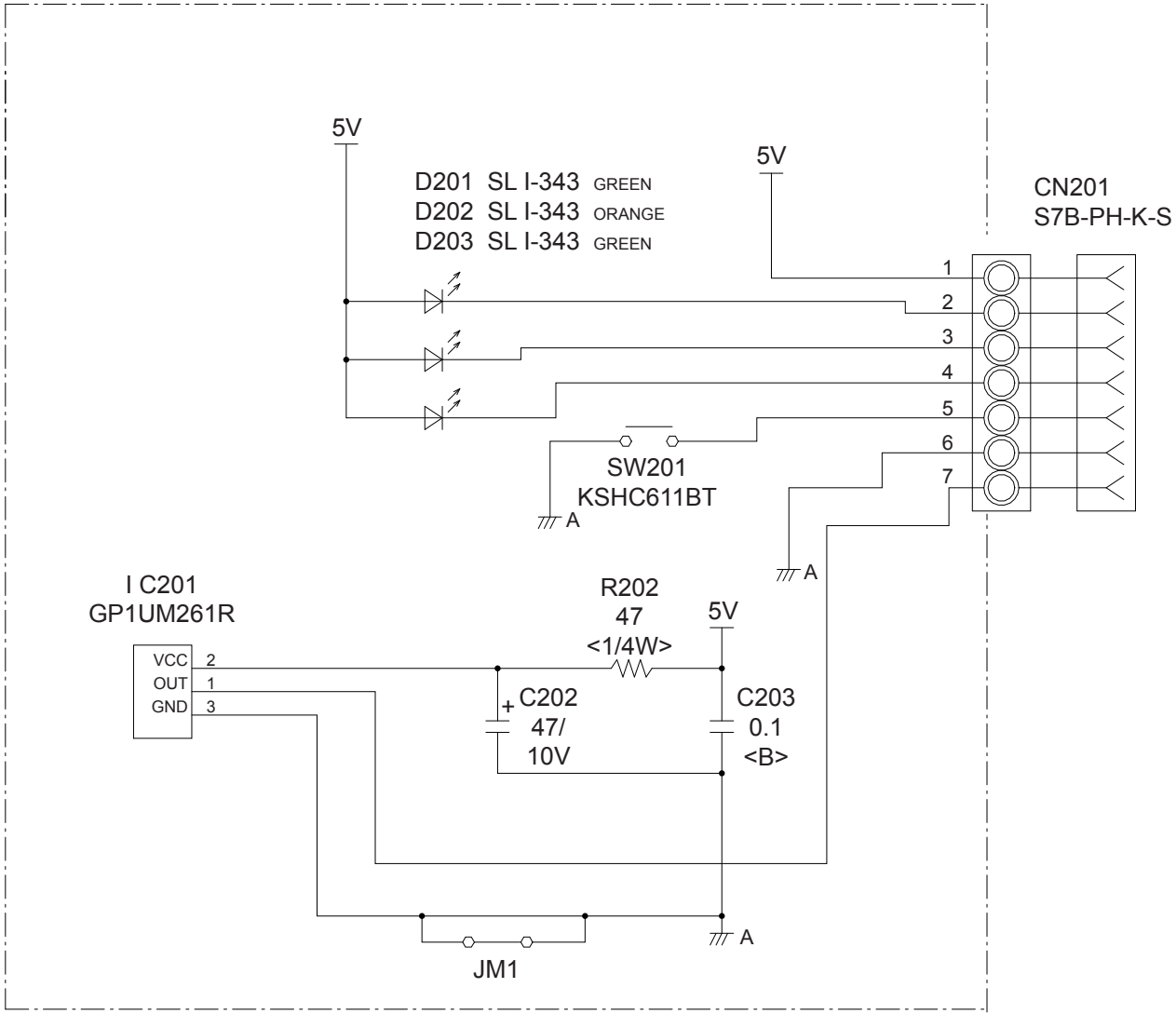

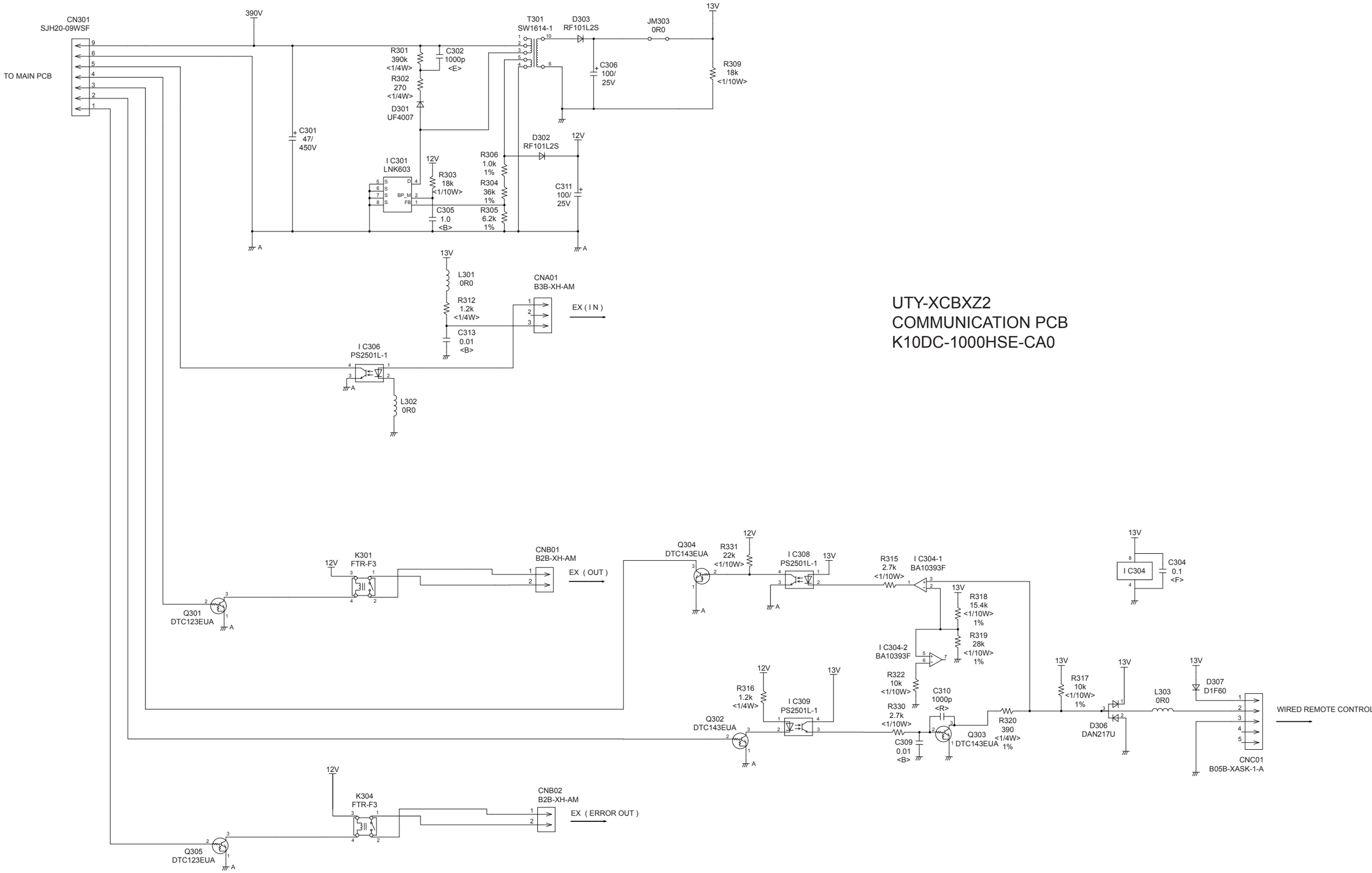

UTY-XCBXZ2
COMMUNICATION PCB
K10DC-1000HSE-CA0

OUTDOOR PCB CIRCUIT DIAGRAM

AOU9RLFW1
INVERTER ASSEMBLY
EZ-01313HUE

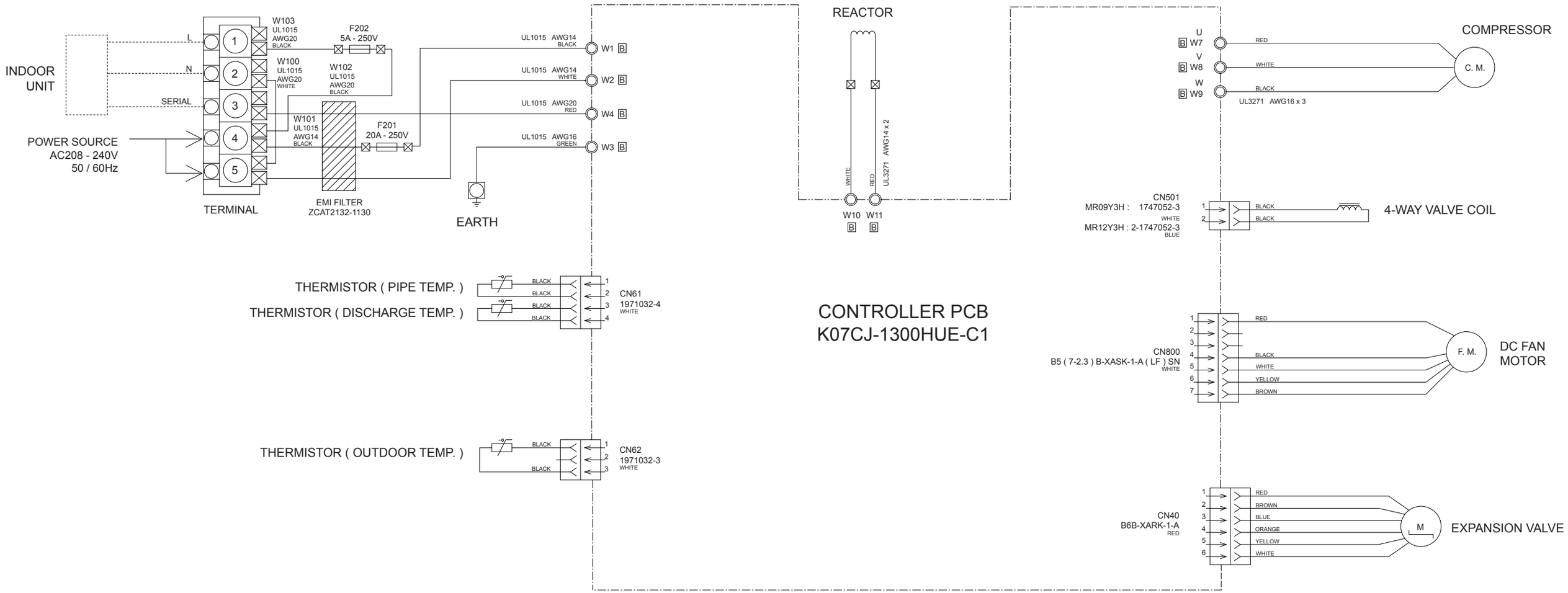

OUTDOOR UNIT
AOU9RLFW1
MAIN PCB
K07CJ-1300HUE-C1

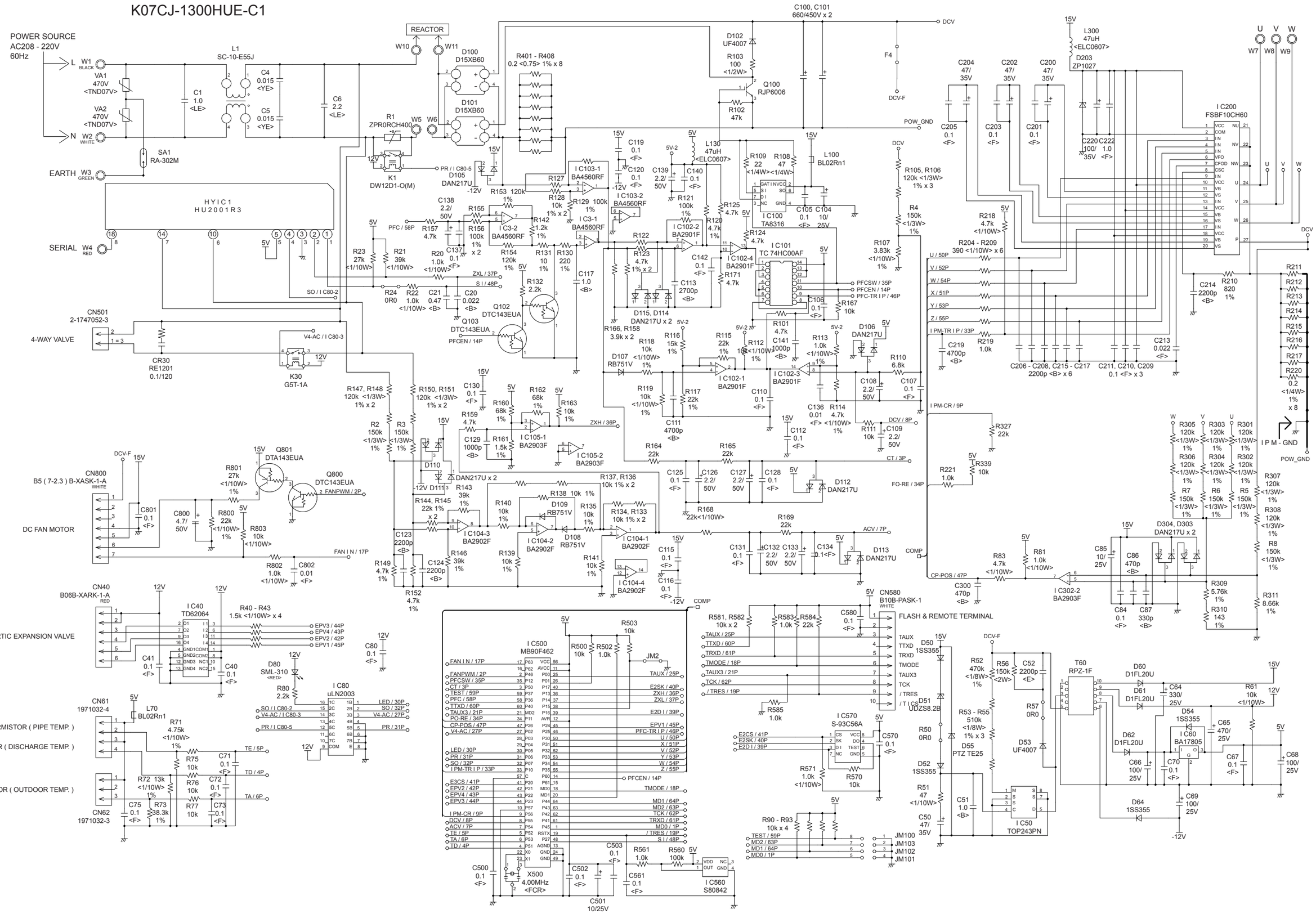

OUTDOOR UNIT
AOU12RLFW1
INVERTER ASSEMBLY
EZ-01312HUE

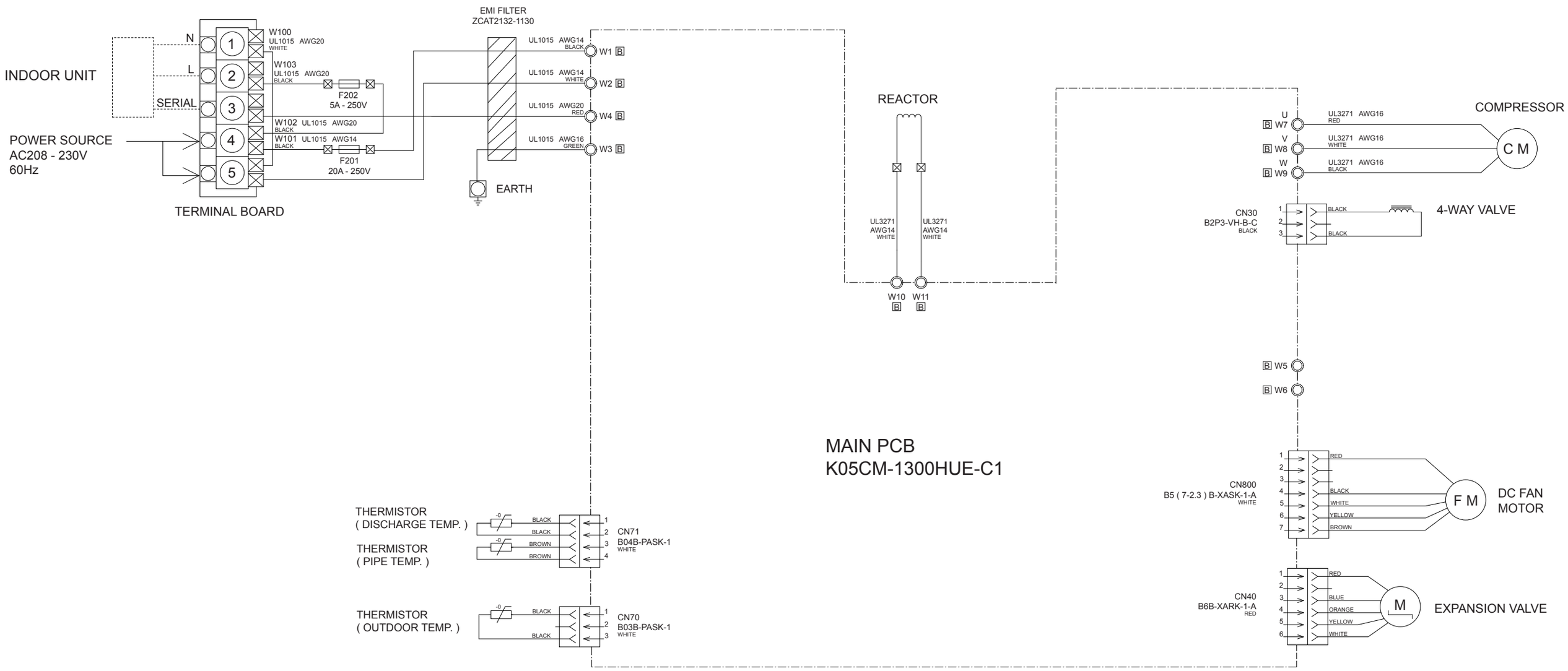

OUTDOOR UNIT
AOU12RLFW1
MAIN PCB
K05CM-1300HUE-C1

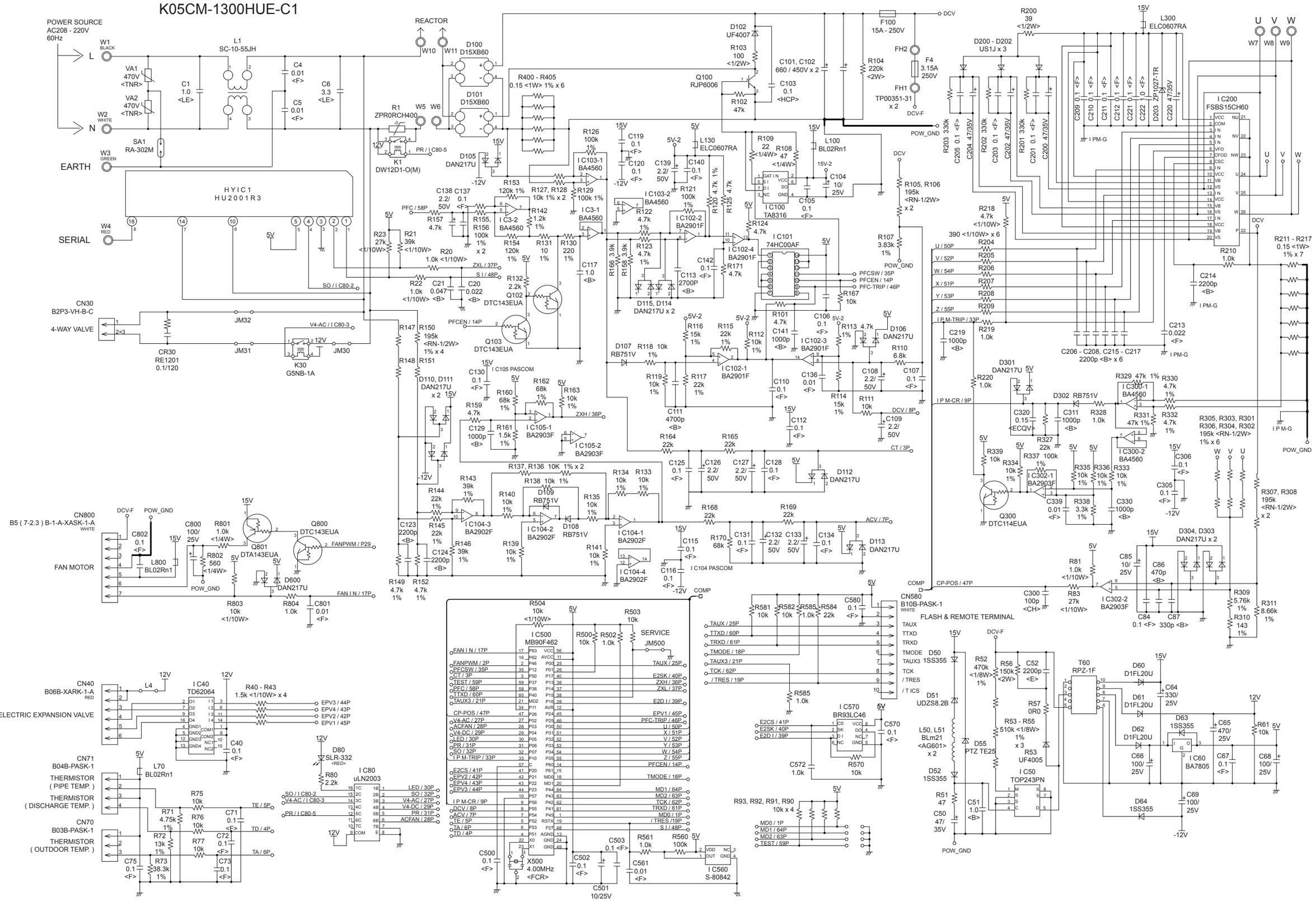

ERROR DETECTION

INDOOR UNIT
REMOTE CONTROL

If you use a wireless remote control, the lamp on the photo detector unit will output error codes by way of blinking patterns.
If you use a wired remote control, error codes will appear on the remote control display.
See the lamp blinking patterns and error codes in the table.
An error display is displayed only during operation.

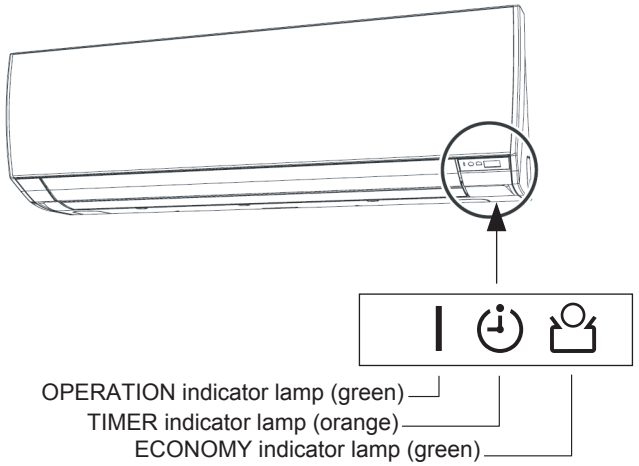

Wired remote control display (Option)

If an error occurs, the following display will be shown.
(“Er” will appear in the set room temperature display.)

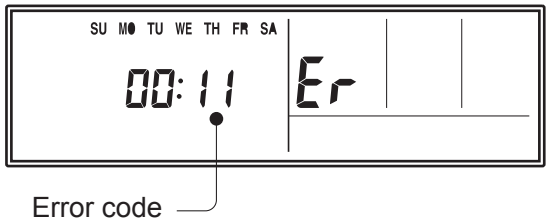

● : 0.5s ON / 0.5s OFF

◇ : 0.1s ON / 0.1s OFF

( ) : Number of flashing

Indoor unit lamps			Wired remote control	Description
OPERATION (green)	TIMER (orange)	ECONOMY (green)		
● (1)	● (1)	◇	11	Serial communication error
● (1)	● (2)	◇	12	Wired remote control communication error
● (1)	● (5)	◇	15	Check run unfinished
● (2)	● (1)	◇	21	Unit number or Refrigerant circuit address setting error [Simultaneous Multi]
● (2)	● (2)	◇	22	Indoor unit capacity error
● (2)	● (3)	◇	23	Combination error
● (2)	● (4)	◇	24	•Connection unit number error (indoor unit) [Simultaneous Multi] •Connection unit number error (indoor unit orbranch unit) [Flexible Multi]
● (2)	● (7)	◇	27	Master unit,slave unit set-up error [Simultaneous Multi]
● (3)	● (2)	◇	32	Indoor unit PCB model information error
● (3)	● (5)	◇	35	Manual auto switch error
● (4)	● (1)	◇	41	Room temp. sensor error
● (4)	● (2)	◇	42	Indoor unit Heat Ex. Middle temp. sensor error
● (5)	● (1)	◇	51	Indoor unit fan motor error
● (5)	● (3)	◇	53	Drain pump error
● (5)	● (7)	◇	57	Damper error
● (5)	● (8)	◇	58	Intake grill error
● (5)	● (15)	◇	5U	Indoor unit error
● (6)	● (2)	◇	62	Outdoor unit main PCB model information error or communication error
● (6)	● (3)	◇	63	Inverter error
● (6)	● (4)	◇	64	Active filter error, PFC circuit error
● (6)	● (5)	◇	65	Trip terminal L error

Indoor unit lamps			Wired remote control	Description
OPERATION (green)	TIMER (orange)	ECONOMY (green)		
● (6)	● (10)	◇	6A	Display PCB microcomputers communication error
● (7)	● (1)	◇	71	Discharge temp. sensor error
● (7)	● (2)	◇	72	Compressor temp. sensor error
● (7)	● (3)	◇	73	Outdoor unit Heat Ex. liquid temp. sensor error
● (7)	● (4)	◇	74	Outdoor temp. sensor error
● (7)	● (5)	◇	75	Suction Gas temp. sensor error
● (7)	● (6)	◇	76	• 2-way valve temp. sensor error • 3-way valve temp. sensor error
● (7)	● (7)	◇	77	Heat sink temp. sensor error
● (8)	● (2)	◇	82	• Sub-cool Heat Ex. gas inlet temp. sensor error • Sub-cool Heat Ex. gas outlet temp. sensor error
● (8)	● (3)	◇	83	Liquid pipe temp. sensor error
● (8)	● (4)	◇	84	Current sensor error
● (8)	● (6)	◇	86	• Discharge pressure sensor error • Suction pressure sensor error • High pressure switch error
● (9)	● (4)	◇	94	Trip detection
● (9)	● (5)	◇	95	Compressor rotor position detection error (permanent stop)
● (9)	● (7)	◇	97	Outdoor unit fan motor error
● (9)	● (9)	◇	99	4-way valve error
● (10)	● (1)	◇	A1	Discharge temp. error
● (10)	● (3)	◇	A3	Compressor temp. error
● (10)	● (4)	◇	A4	High pressure error
● (10)	● (5)	◇	A5	Low pressure error
● (13)	● (2)	◇	J2	Branch boxes error

OUTDOOR UNIT

LED	ERROR
on	Discharge temperature abnormal
0.5 second on / 0.5 second off	IPM overcurrent protection
0.1 second on / 0.1 second off	Thermistor abnormal
2.0 second on / 2.0 second off	CT abnormal
0.1 second on / 2.0 second off	Compressor location abnormal
5.0 second on / 5.0 second off	Fan abnormal

PARTS

INDOOR UNIT

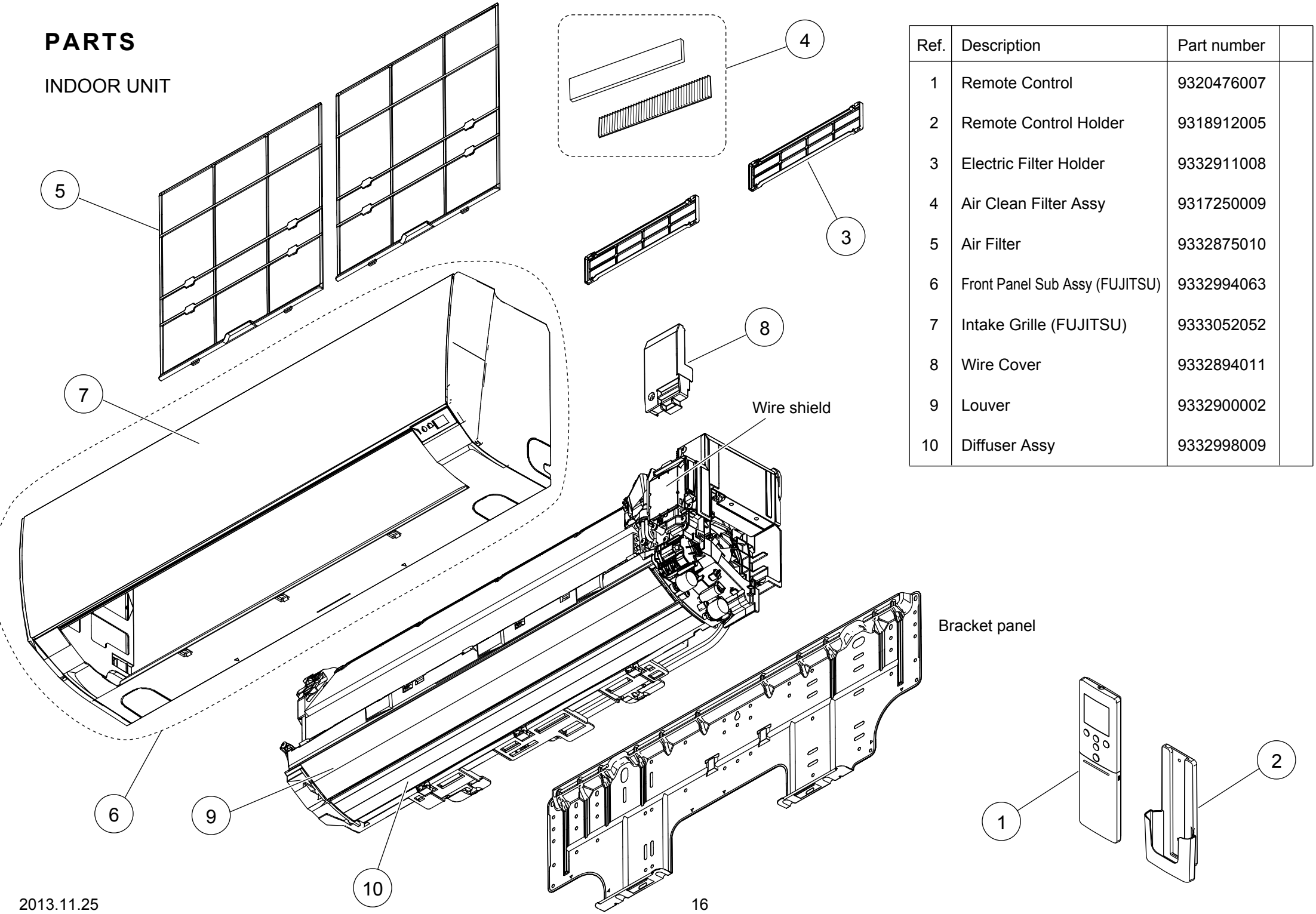

Ref.	Description	Part number	
1	Remote Control	9320476007	
2	Remote Control Holder	9318912005	
3	Electric Filter Holder	9332911008	
4	Air Clean Filter Assy	9317250009	
5	Air Filter	9332875010	
6	Front Panel Sub Assy (FUJITSU)	9332994063	
7	Intake Grille (FUJITSU)	9333052052	
8	Wire Cover	9332894011	
9	Louver	9332900002	
10	Diffuser Assy	9332998009	

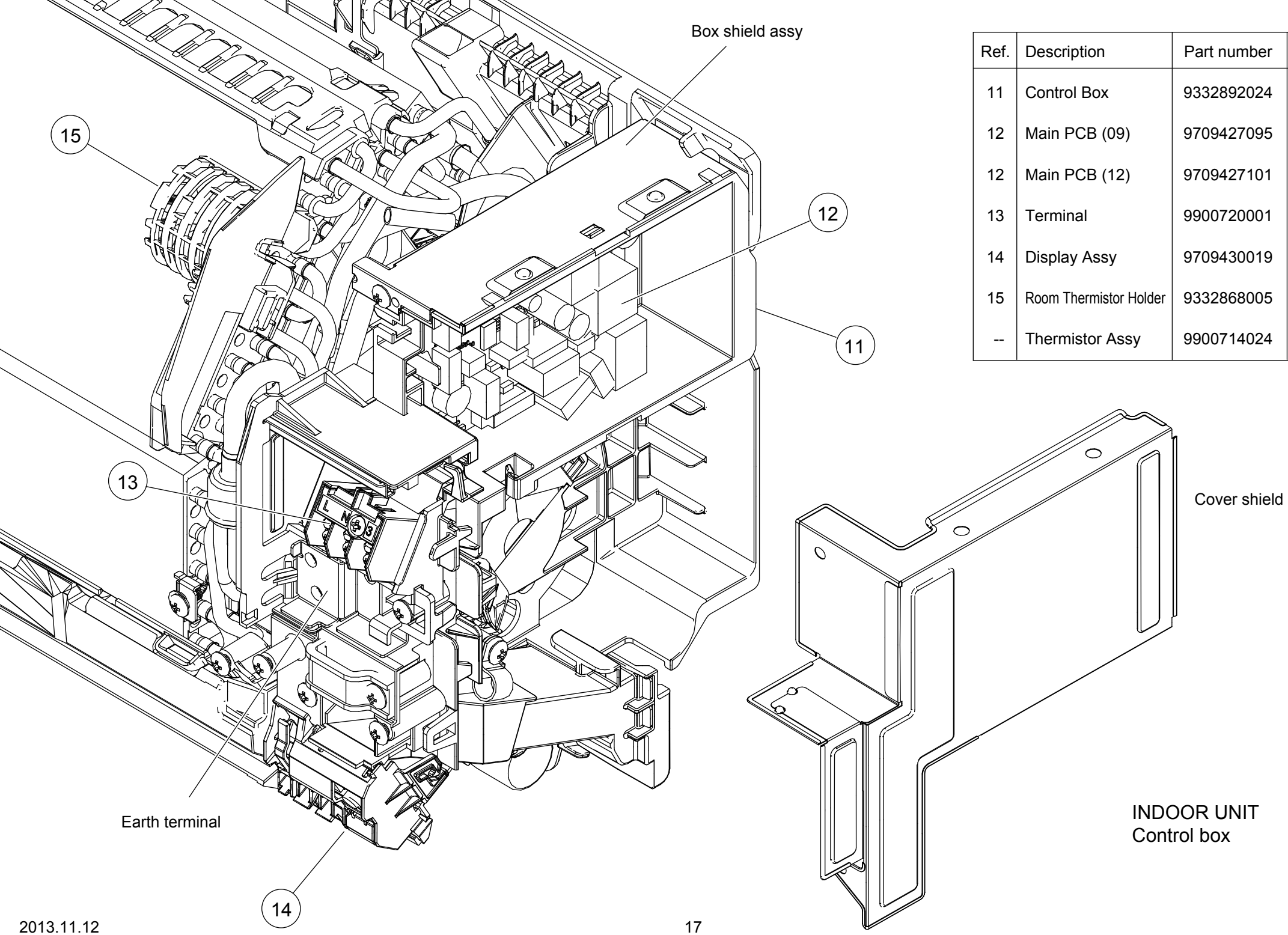

Ref.	Description	Part number	
11	Control Box	9332892024	
12	Main PCB (09)	9709427095	
12	Main PCB (12)	9709427101	
13	Terminal	9900720001	
14	Display Assy	9709430019	
15	Room Thermistor Holder	9332868005	
--	Thermistor Assy	9900714024	

INDOOR UNIT
Control box

INDOOR UNIT
Evaporator
Fan

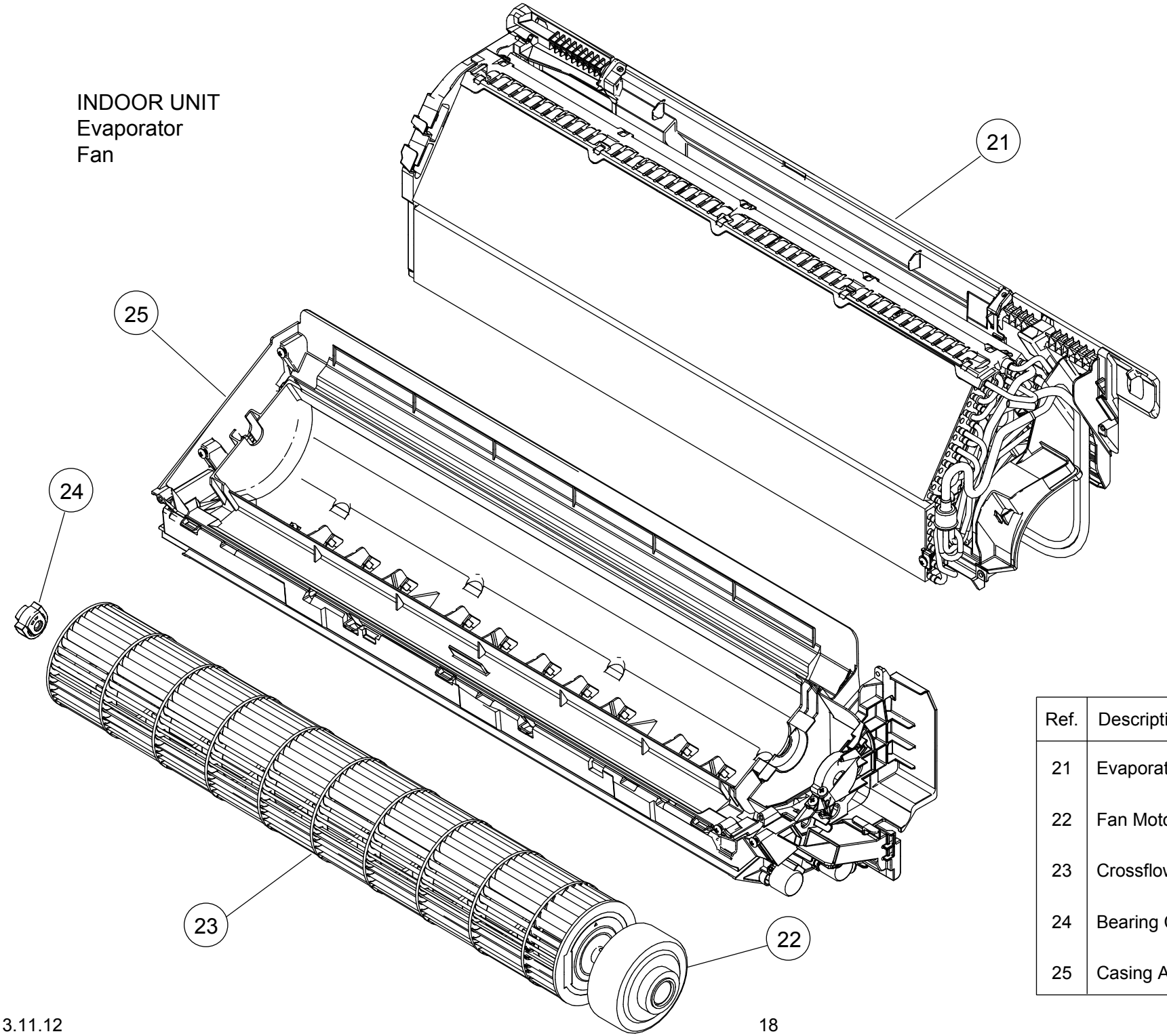

Ref.	Description	Part number	
21	Evaporator Total Assy	9332989007	
22	Fan Motor	9603269012	
23	Crossflow Fan Assy	9316830004	
24	Bearing C Assy	9306628017	
25	Casing Assy	9333009056	

INDOOR UNIT
Casing assy

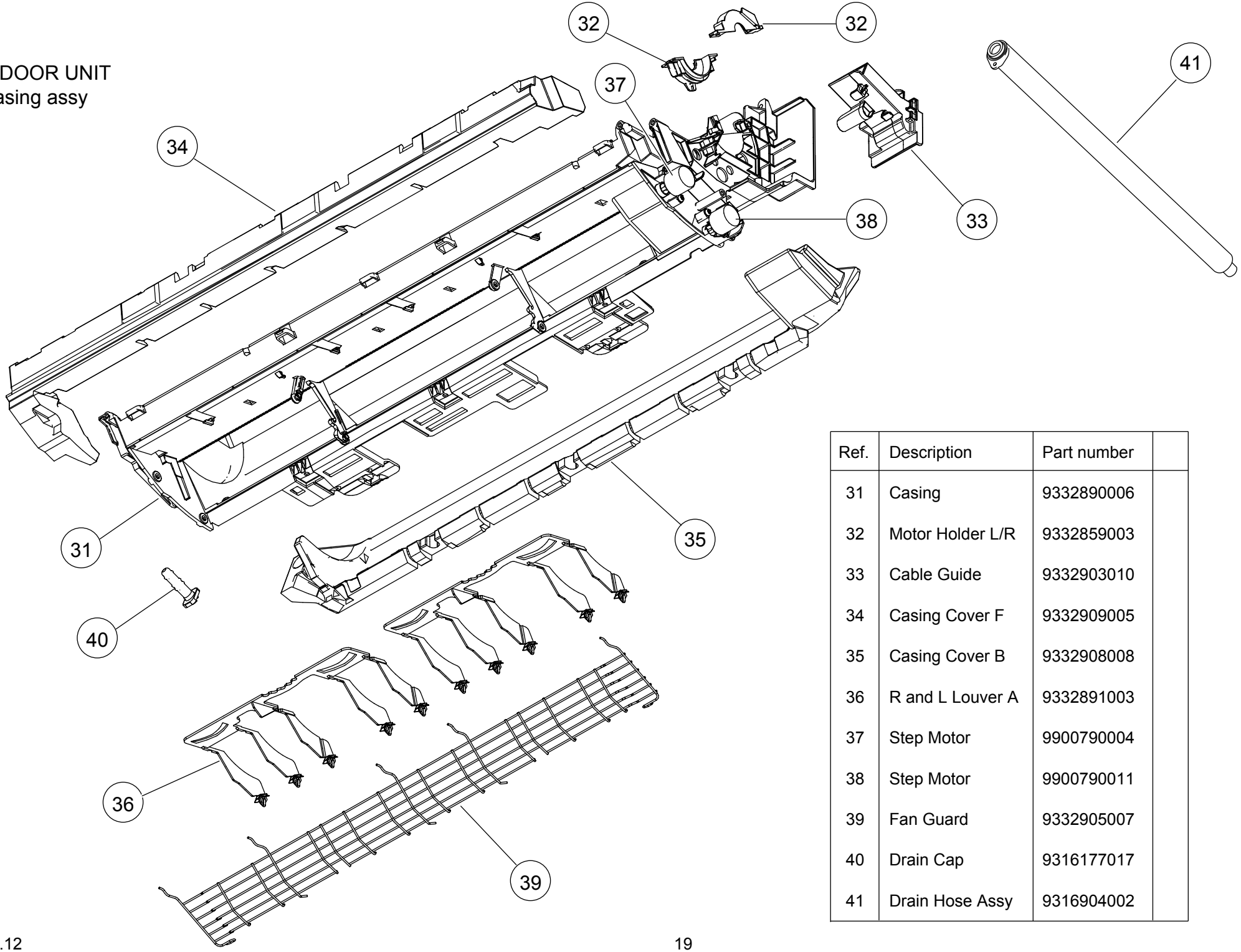

Ref.	Description	Part number	
31	Casing	9332890006	
32	Motor Holder L/R	9332859003	
33	Cable Guide	9332903010	
34	Casing Cover F	9332909005	
35	Casing Cover B	9332908008	
36	R and L Louver A	9332891003	
37	Step Motor	9900790004	
38	Step Motor	9900790011	
39	Fan Guard	9332905007	
40	Drain Cap	9316177017	
41	Drain Hose Assy	9316904002	

PARTS

OUTDOOR UNIT
AOU9RLFW1

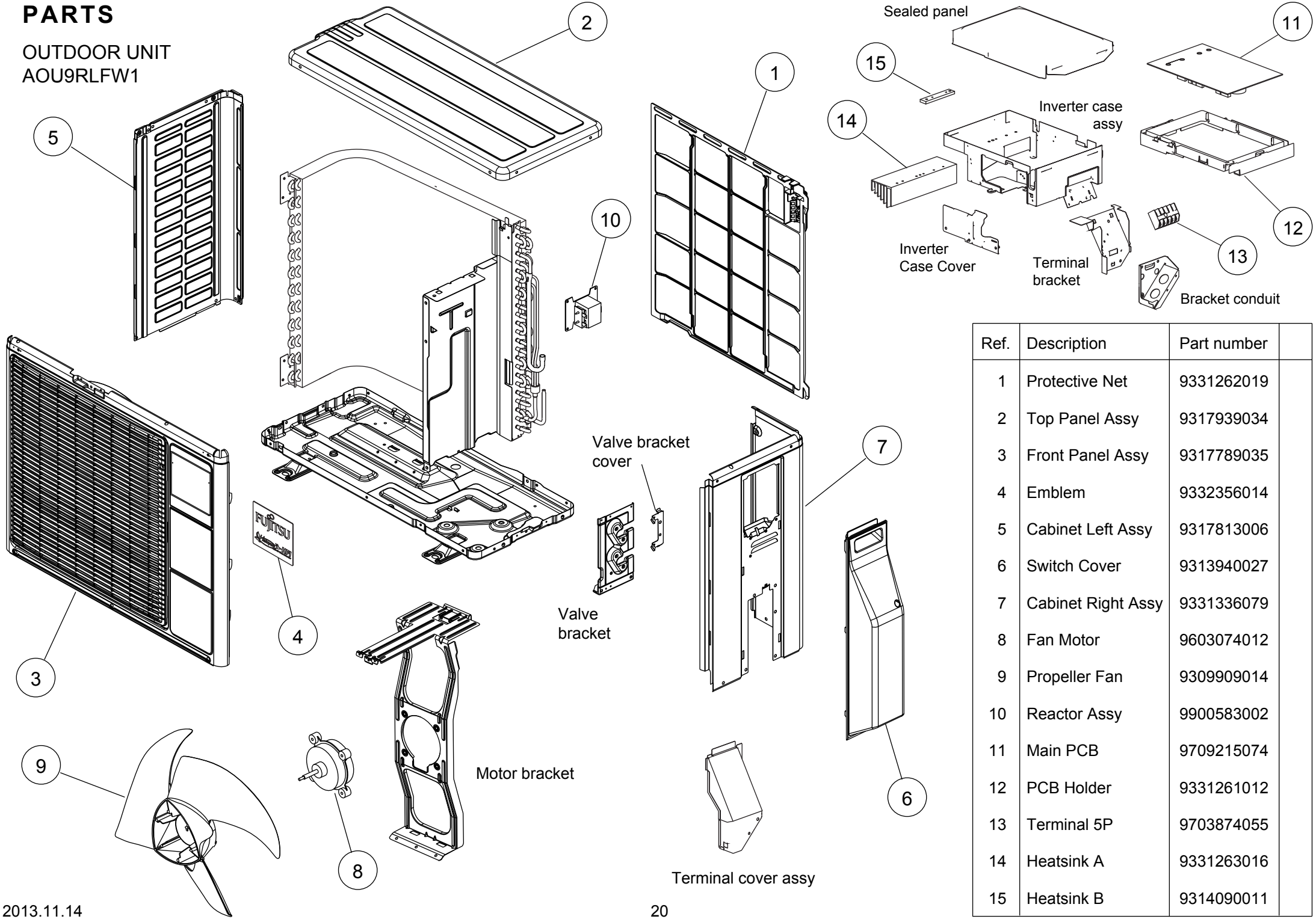

Ref.	Description	Part number	
1	Protective Net	9331262019	
2	Top Panel Assy	9317939034	
3	Front Panel Assy	9317789035	
4	Emblem	9332356014	
5	Cabinet Left Assy	9317813006	
6	Switch Cover	9313940027	
7	Cabinet Right Assy	9331336079	
8	Fan Motor	9603074012	
9	Propeller Fan	9309909014	
10	Reactor Assy	9900583002	
11	Main PCB	9709215074	
12	PCB Holder	9331261012	
13	Terminal 5P	9703874055	
14	Heatsink A	9331263016	
15	Heatsink B	9314090011	

OUTDOOR UNIT
AOU9RLFW1

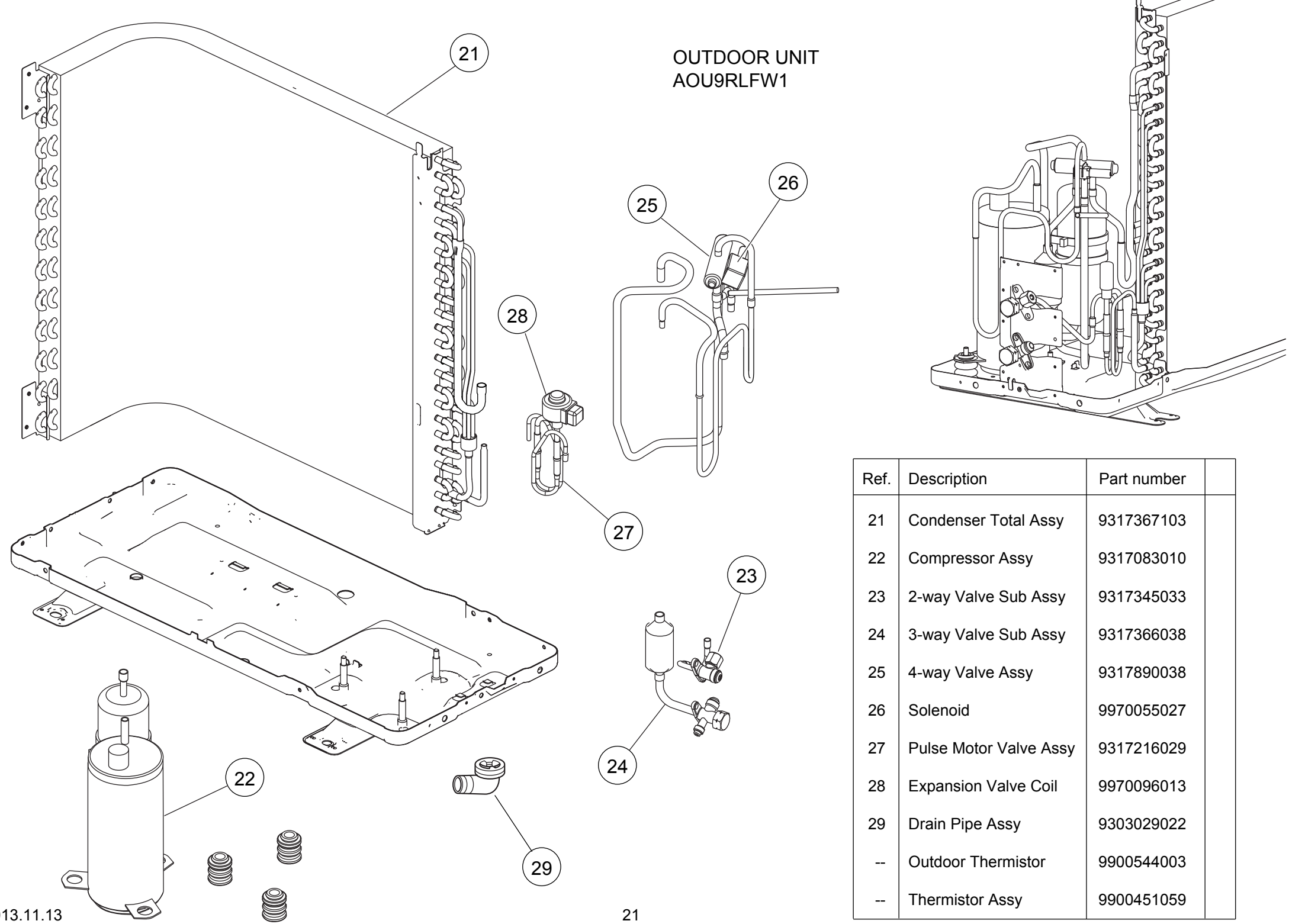

Ref.	Description	Part number	
21	Condenser Total Assy	9317367103	
22	Compressor Assy	9317083010	
23	2-way Valve Sub Assy	9317345033	
24	3-way Valve Sub Assy	9317366038	
25	4-way Valve Assy	9317890038	
26	Solenoid	9970055027	
27	Pulse Motor Valve Assy	9317216029	
28	Expansion Valve Coil	9970096013	
29	Drain Pipe Assy	9303029022	
--	Outdoor Thermistor	9900544003	
--	Thermistor Assy	9900451059	

OUTDOOR UNIT
AOU12RLFW1

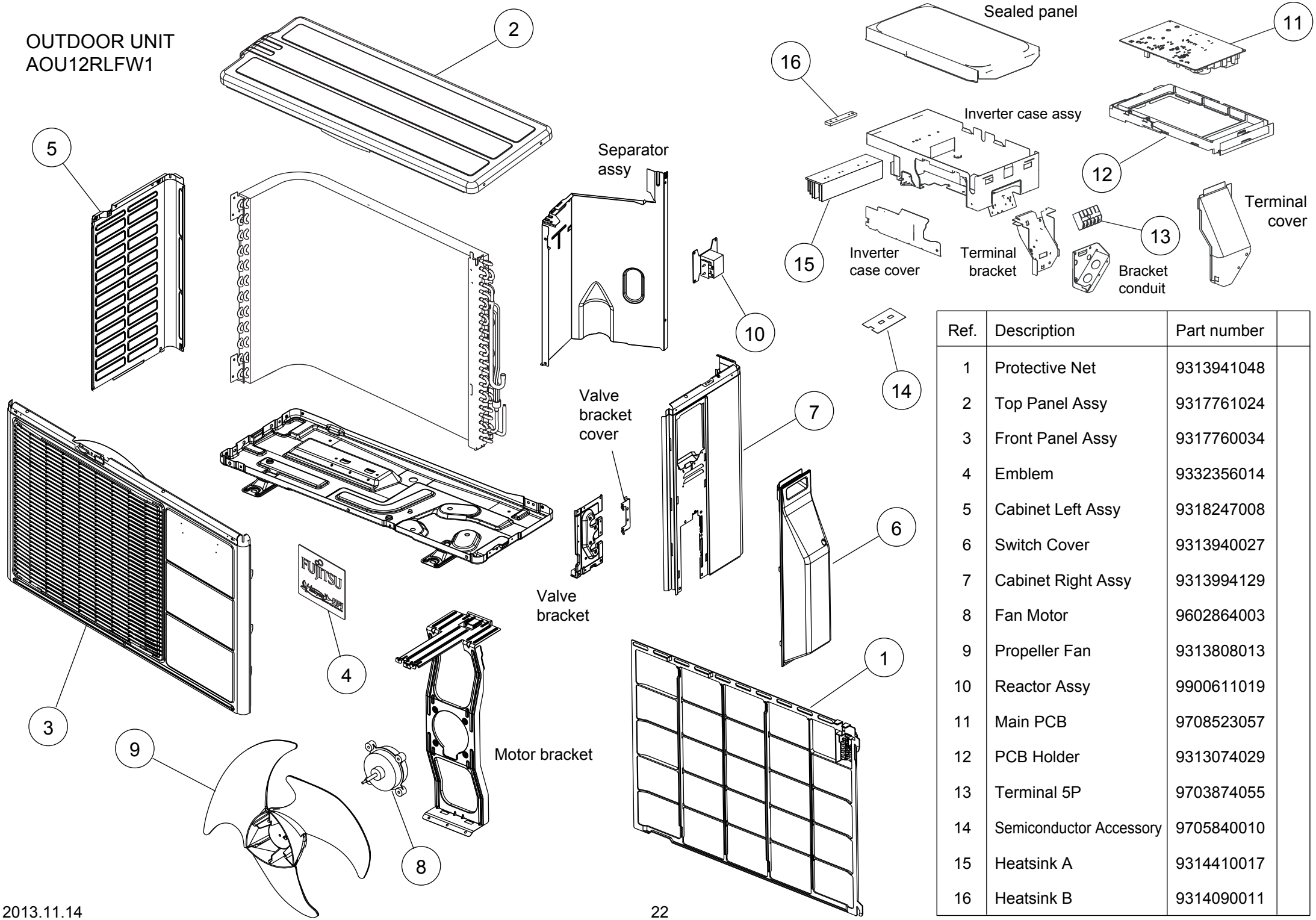

Ref.	Description	Part number	
1	Protective Net	9313941048	
2	Top Panel Assy	9317761024	
3	Front Panel Assy	9317760034	
4	Emblem	9332356014	
5	Cabinet Left Assy	9318247008	
6	Switch Cover	9313940027	
7	Cabinet Right Assy	9313994129	
8	Fan Motor	9602864003	
9	Propeller Fan	9313808013	
10	Reactor Assy	9900611019	
11	Main PCB	9708523057	
12	PCB Holder	9313074029	
13	Terminal 5P	9703874055	
14	Semiconductor Accessory	9705840010	
15	Heatsink A	9314410017	
16	Heatsink B	9314090011	

OUTDOOR UNIT
AOU12RLFW1

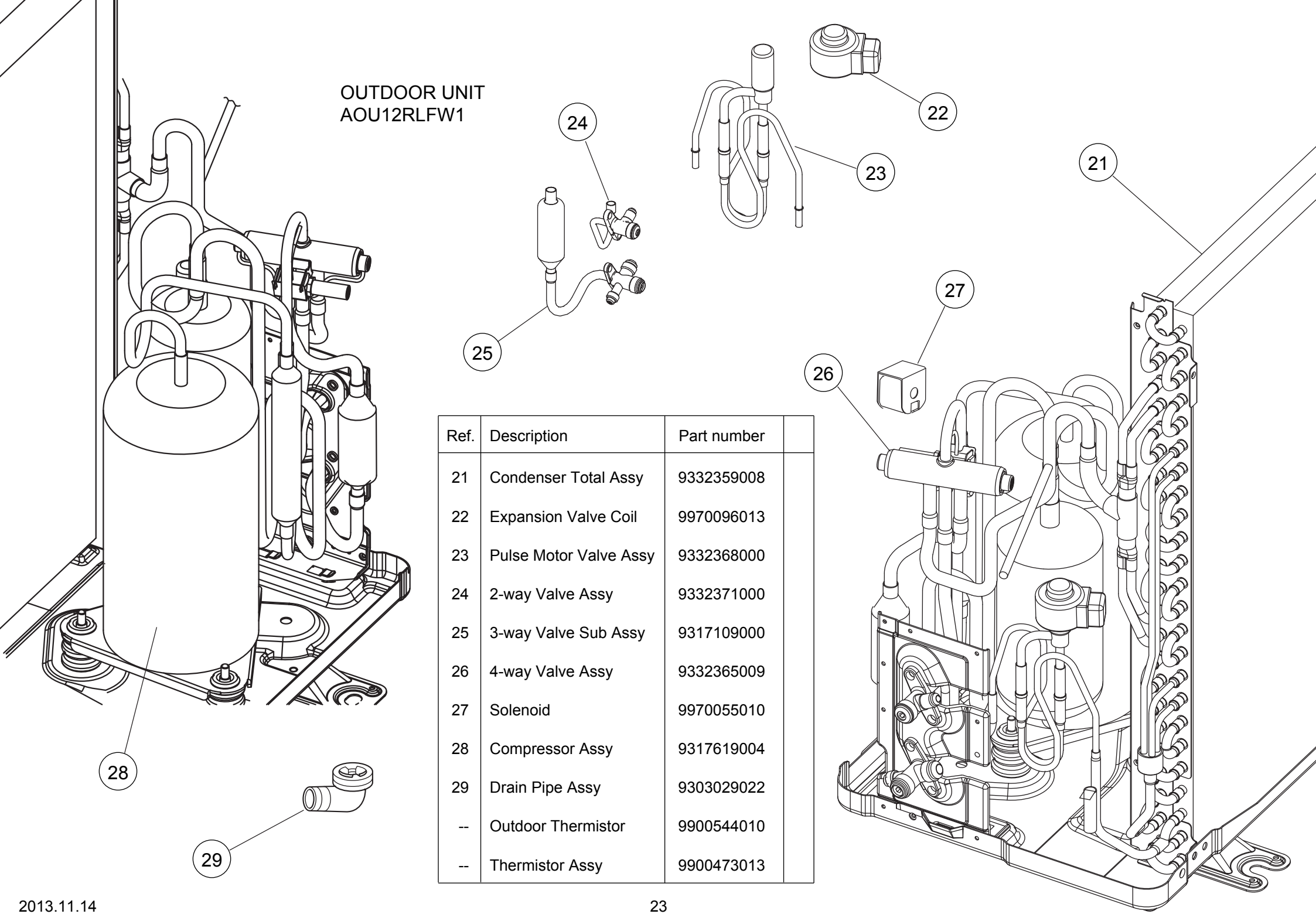

Ref.	Description	Part number	
21	Condenser Total Assy	9332359008	
22	Expansion Valve Coil	9970096013	
23	Pulse Motor Valve Assy	9332368000	
24	2-way Valve Assy	9332371000	
25	3-way Valve Sub Assy	9317109000	
26	4-way Valve Assy	9332365009	
27	Solenoid	9970055010	
28	Compressor Assy	9317619004	
29	Drain Pipe Assy	9303029022	
--	Outdoor Thermistor	9900544010	
--	Thermistor Assy	9900473013	

ACCESSORIES

INDOOR UNIT

Name and Shape	Part number
Bracket Panel	9332882018
Remote Control	9320476007
Remote Control Holder	9318912005
Battery (penlight)	0600185541

Name and Shape	Part number
Cloth tape	9310519004
Tapping screw (M4 x 25 mm)	0700076046
Tapping screw (M3 x 12 mm)	0700019036
Air cleaning filter assy	9317250009
Filter holder	9332911008

OPTIONAL PARTS

Name and Shape
Wired remote control UTY-RVNUM
Wired remote control UTY-RNNUM
Simple remote Control UTY-RSNUM
External connect kit UTY-XWZXZ5
Communication kit UTY-XCBXZ2

OUTDOOR UNIT

Name and Shape	Part number
Drain pipe	9303029022

1310G4268